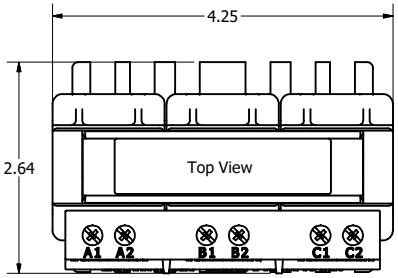

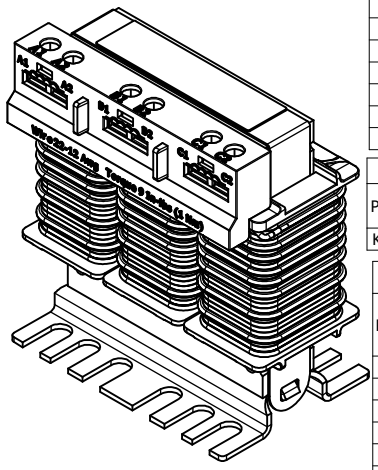

480 Rated Voltage, 690 Max Voltage, High Z, Impedance.						
Part Number	Horsepower (HP)	Motor Amps (A)	Maximum Amps (A)	Inductance (uH) +/-10%	Weight (LBS)	Losses (W)
KDRAA9H2	1 1/2	3.00	4.0	12300	2.8	37
KDRAA1H2	2	3.40	3.8	10800	2.8	45
KDRAA2H2	3	4.80	5.4	7650	3.0	42
KDRAA6H2	4	6.20	7.6	5930	3.4	50
KDRAA3H2	5	7.60	8.2	4840	3.7	66
KDRAA3H2	5 1/2	8.20	8.2	4840	3.7	74
KDRAA4H2	7 1/2	11	12	3060	4.0	70
KDRAA5H2	10	14	14	2330	4.2	97.7

208/ 240 Rated Voltage, 690 Max Voltage,High Z, Impedance.						
Part Number	Horsepower (HP)	Motor Amps (A)	Maximum Amps (A)	Inductance (uH) +/-10%	Weight (LBS)	Losses (W)
KDRAA28H2	3	10.6	11	1618	2.6	44.6

600 Rated Voltage, 690 Max Voltage, High Z, Impedance.						
Part Number	Horsepower (HP)	Motor Amps (A)	Maximum Amps (A)	Inductance (uH) +/-10%	Weight (LBS)	Losses (W)
KDRAA46H2	1 1/2	2.40	3.2	19100	2.9	31
KDRAA43H2	2	2.70	3.4	17000	2.7	37
KDRAA44H2	3	3.90	4.5	11800	2.9	47
KDRAA57H2	4	4.90	6.0	9380	3.5	48
KDRAA58H2	5	6.10	6.8	7530	3.4	44
KDRAA58H2	5 1/2	6.60	6.8	7530	3.4	47

480 Rated Voltage, 690 Max Voltage, Low Z, Impedance.						
Part Number	Horsepower (HP)	Motor Amps (A)	Maximum Amps (A)	Inductance (uH) +/-10%	Weight (LBS)	Losses (W)
KDRAA9L2	1 1/2	3.00	4.5	7400	3.0	25
KDRAA6L2	4	6.20	7.6	3560	3.0	39
KDRAA3L2	5	7.60	8.2	2900	3.0	45
KDRAA3L2	5 1/2	8.20	8.2	2900	3.0	49
KDRAA4L2	7 1/2	11.0	11.6	2000	3.2	64
KDRAA5L2	10	14	14	1580	3.3	77.7

208/ 240 Rated Voltage, 690 Max Voltage, Low Z, Impedance.						
Part Number	Horsepower (HP)	Motor Amps (A)	Maximum Amps (A)	Inductance (uH) +/-10%	Weight (LBS)	Losses (W)
KDRAA28L2	3	10.6	12	971	3.0	42

600 Rated Voltage, 690 Max Voltage, Low Z, Impedance.						
Part Number	Horsepower (HP)	Motor Amps (A)	Maximum Amps (A)	Inductance (uH) +/-10%	Weight (LBS)	Losses (W)
KDRAA47L2	2	2.70	4.8	10200	2.8	19
KDRAA52L2	3	3.90	4.8	7070	3.5	30
KDRAA57L2	4	4.90	7.6	5630	2.9	30
KDRAA58L2	5	6.10	7.6	4520	3.0	39
KDRAA58L2	5 1/2	6.60	7.6	4520	3.0	44
KDRAA48L2	7 1/2	9.00	9.6	3100	3.2	57
KDRAA49L2	10	11	11	2454	3.8	60.7

Front View

Wire Range: 22-12 AWG.
Torque : 9 In-lbs (1 Nm)

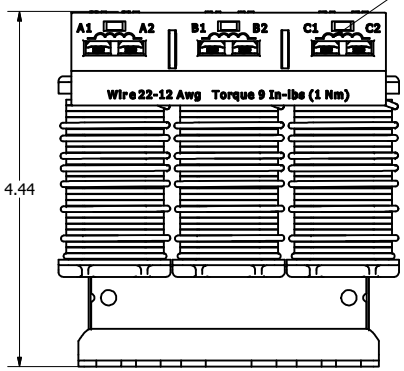

Side View

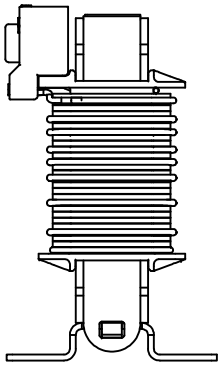

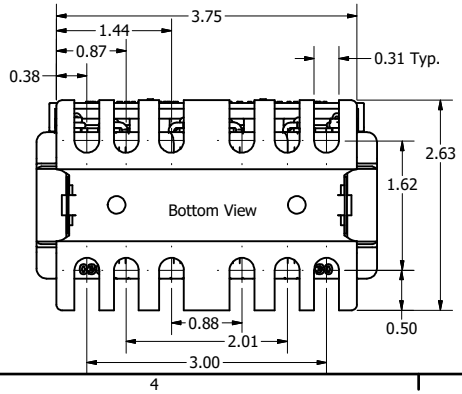

Wiring Diagram

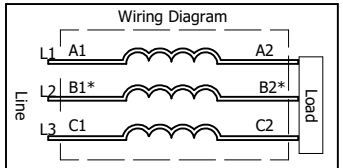

Line Reactor

* For single phase applications, use coils A and C, Isolate terminals B1 and B2.

TCI, LLC | Germantown, WI | transcoil.com

KDR Drive Reactor
KDR----- Motor Amps—
3PH 50/60Hz, —V Rated, 690V Max, —A Max, RoHS
50C Amb Max 135C Rise, Manual # 30895

c UL us LISTED
IND CONT. EQ. SHAO

CE

Date Code

Notes:
1. UL file number: cULus Listed File E116124.
2. KDR Drive Reactors Comply With The Thermal and Altitude Standards Set Forth by NEMA ST20-1992.
3. KDR IOM Manual Part Number 30895
4. NEC Current For 208/240 Volts, Horsepower Based On 208 Volts.
5. For Din Rail Kit, See Part Number DR02.
6. Material(s) Shall be RoHS Compliant
7. Customer Is Responsible For Installation To Meet All National And Local Electrical Codes.

TCI, LLC CLAIMS PROPRIETARY RIGHTS IN THE MATERIAL HEREIN DISCLOSED. IT IS SUPPLIED WITHOUT PREDJUDICE TO ANY PATENT RIGHTS OF TCI AND MAY NOT BE REPRODUCED OR USED TO MANUFACTURE ANYTHING SHOWN THEREIN WITHOUT WRITTEN PERMISSION FROM TCI.

NO	REVISION	DATE	BY
C	KDRAA28L2 (Correct Amps 11 to 12)	7/28/2020	DSW
C	4918, KDRAA49L2, 575 to 600v		
C	KDRAA49L2 (Only Part At Rev C)	10/8/19	DSW
B	4815,Add Inductors (4), (5). (28), (49)	7/24/19	DSW
A	As Designed	11/3/17	DSW

TOLERANCES (EXCEPT AS NOTED)
DECIMAL .XX ± .25 .XXX ± .10
FRACTIONAL ± 1/16
ANGULAR ± 1°

TCI

KDR AA Frame, Terminal Block Reactor Drawing

DRN. BY DSW | DATE: 11/3/17 | 107073DG
SCALE: 1:1.2 | APRVD: | SIZE: C | SHT 1 OF 1